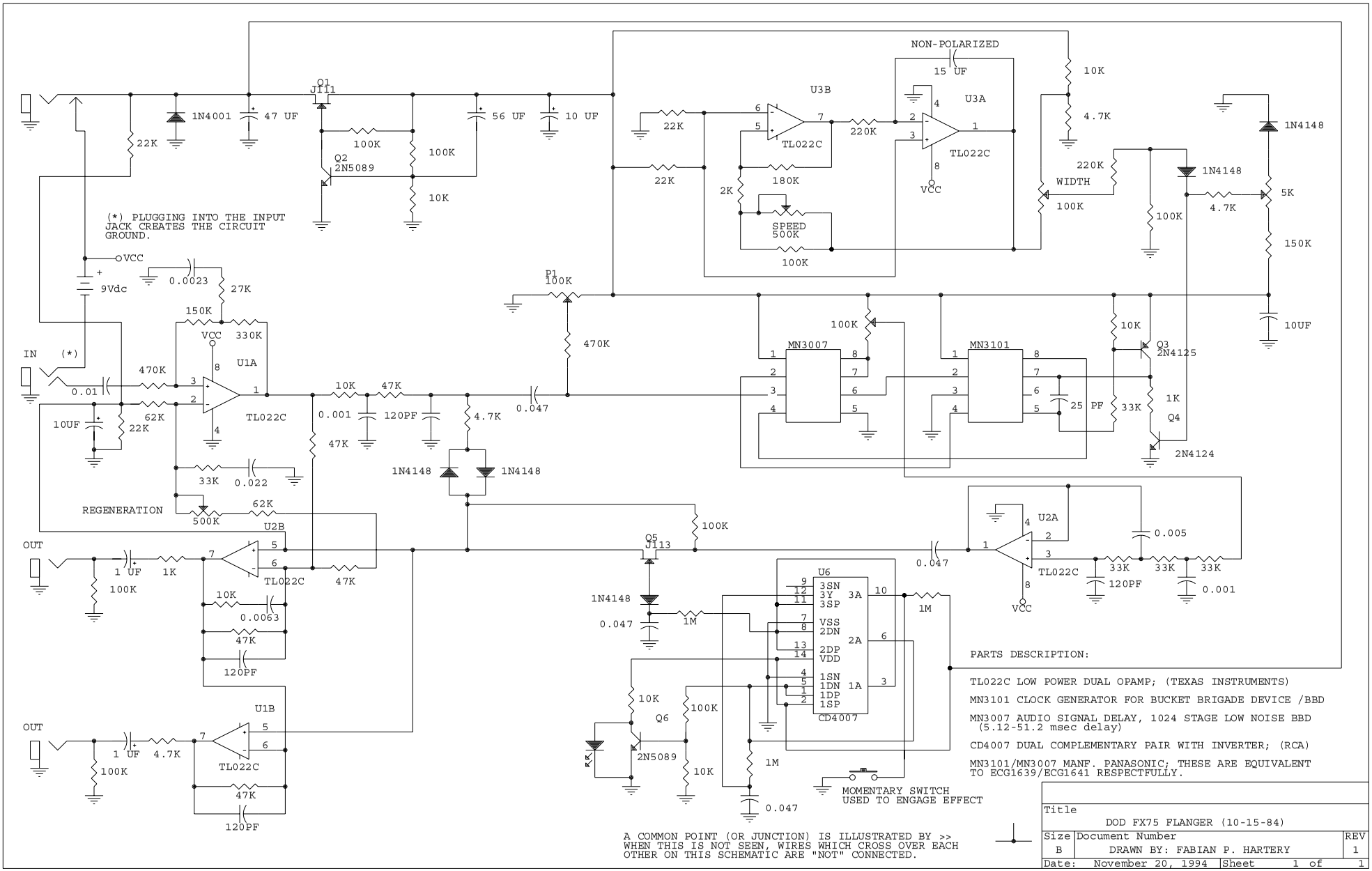
NON-POLARIZED
15 UF
U3B
U3A
TL022C
TL022C
10K
4.7K
22K
220K
22K
180K
2K
SPEED
500K
100K
VCC
WIDTH
100K
220K
100K
1N4148
1N4148
4.7K
5K
150K
10UF
1N4001
47 UF
Q1
J111
100K
Q2
2N5089
100K
10K
56 UF
10 UF
22K
(*) PLUGGING INTO THE INPUT
JACK CREATES THE CIRCUIT
GROUND.
VCC
9Vdc
0.0023
27K
150K
330K
VCC
U1A
IN
(*)
470K
0.01
62K
22K
10UF
TL022C
33K
0.022
REGENERATION
500K
62K
P1
100K
470K
10K
47K
0.001
120PF
47K
4.7K
0.047
1N4148
1N4148
MN3007
MN3101
100K
10K
Q3
2N4125
25 PF
33K
1K
Q4
2N4124
100K
U2B
OUT
1 UF
1K
100K
TL022C
47K
10K
0.0063
47K
120PF
U1B
OUT
1 UF
4.7K
100K
TL022C
47K
120PF
Q5
J113
1N4148
0.047
1M
U6
3SN
3Y
3SP
VSS
2DN
2DP
VDD
1SN
1DN
1DP
1SP
CD4007
3A
2A
1A
1M
10K
Q6
2N5089
100K
10K
1M
0.047
MOMENTARY SWITCH
USED TO ENGAGE EFFECT
0.047
U2A
TL022C
VCC
0.005
33K
33K
33K
120PF
0.001
PARTS DESCRIPTION:
TL022C LOW POWER DUAL OPAMP; (TEXAS INSTRUMENTS)
MN3101 CLOCK GENERATOR FOR BUCKET BRIGADE DEVICE /BBD
MN3007 AUDIO SIGNAL DELAY, 1024 STAGE LOW NOISE BBD
(5.12-51.2 msec delay)
CD4007 DUAL COMPLEMENTARY PAIR WITH INVERTER; (RCA)
MN3101/MN3007 MANF. PANASONIC; THESE ARE EQUIVALENT
TO ECG1639/ECG1641 RESPECTFULLY.
A COMMON POINT (OR JUNCTION) IS ILLUSTRATED BY >>
WHEN THIS IS NOT SEEN, WIRES WHICH CROSS OVER EACH
OTHER ON THIS SCHEMATIC ARE "NOT" CONNECTED.
Title
DOD FX75 FLANGER (10-15-84)
Size
B
Document Number
DRAWN BY: FABIAN P. HARTERY
REV
1
Date: November 20, 1994
Sheet 1 of 1